KSHU771XAU

Product family	Hood
Hood Type	Integrated hood
Design	Ceiling
Extraction	Recirculation
Material	Stainless steel
Type of steel	Brushed
EAN code	8017709364076
Aesthetic	Universale
Colour	Stainless steel
Finishing	Satin



Controls

Control setting	Buttons

Program / Functions

No. of speeds	3
Intensive speed	BOOST

Technical Features

No. of lights	2	**No. of filters**	2
Light type	LED	**Anti-grease filters**	Stainless steel
Light Power	1.1 W	**Vent outlet**	150 mm
Light color temperature scale (K)	4000 K	**Minimum distance from GAS hob**	650 mm
Free outlet maximum capacity	780 m³/h	**Minimum distance from ELECTRIC hob**	550 mm
Motor power	230 W	**Non return valve**	Yes

	Extraction rate IEC 61591 [m³/h]	Noise level IEC 60704-2-13 [dBA]
Speed 1	277	46
Speed 2	367	53
Speed 3	481	59

Intensive speed	721	68

Accessories Included

Tube reduction	Yes

Electrical Connection

Current	10 A	**Power supply cable length**	1500 mm
Voltage	220-240 V	**Plug**	(I) Australia
Frequency (Hz)	50-60 Hz		

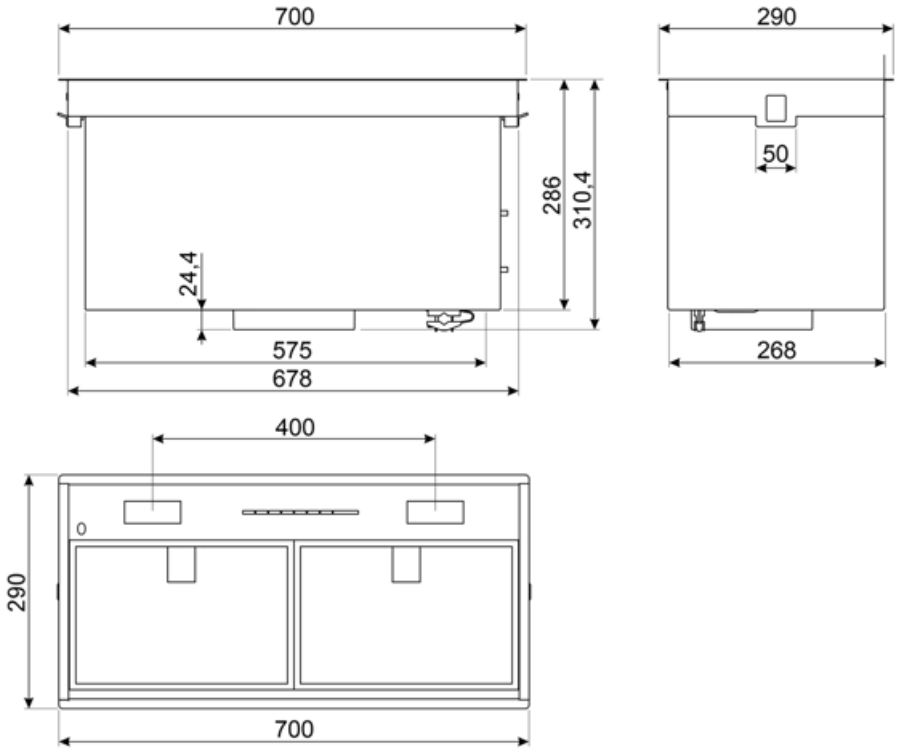

Compatible Accessories



FLT6

Round Charcoal filters (kit 2 pieces)

Symbols glossary



Filters: Model has filters to help remove grease from the steam emanating from the pans during cooking.



Intensive/turbo setting: when extra fast extraction is required.



Lights: All cooker hoods feature lights to illuminate the cooking area or add to the ambience of the kitchen.