562L Quad Door Fridge Matte Charcoal Black - UltimateTaste 800 Series with MultiChill convertible drawer, 4-star energy, Greenzone crisper with automatic humidity control, WaterStream in door dispenser & AutoIce internal icemaker

Product Details

FEATURES

Water filter alert	Ice maker control	Fast Ice	Bar Handles
Freezer LED Lighting	Fridge LED Lighting	Semi Slot-In	Air Filter
AI CoolAssist	Metal MultiFlow	High temperature alarm	Door alarm
GreenZone with auto humidity control	QuickChill function	QuickFreeze function	

BENEFITS

A FRESH, ODOUR-FREE FRIDGE
FresherAir carbon filter helps preserves the natural aromas of your stored food and keeps the refrigerator smelling fresh. This filter effectively absorbs unpleasant odours and reduces any transfer between ingredients.

FOOD PROTECTED ON EVERY SHELF
Cooling 360° helps protect the food quality by optimising stable temperature and humidity levels throughout the entire fridge. Multiple air channels on the rear wall actively circulate cold air to every corner.

PRESERVE FRESHNESS FOR LONGER
Long-lasting freshness, built in. The sealed GreenZone drawer controls humidity automatically removing excess moisture to lock in taste and texture. Helps Fruit and vegetables stay crisp for longer, so less ends up in the bin.

Save up to 10% energy*
Save up to 10% energy* with our smart fridge! AICoolAssist adjusts settings to reduce the energy consumption. *Test performed on the EQE5757BB comparing the 24 hour consumption when the CoolAssist function is activated with the default factory mode. Actual energy saving may vary, depending on environmental temperatures.

CUSTOM COOLING WITH MULTICHILL
From party drinks to dinner prep, MultiChill gives you three set temperatures: 3°C for cheese and cold cuts, 0°C for refreshing beverages, and -2°C for meat and fish that stay fresh longer.

CHILLED WATER, INSTANT ICE
Enjoy cool refreshments at any time. The in-door dispenser provides chilled water instantly, while the Auto Ice maker keeps plenty of fresh ice ready at hand.

Specifications

PRODUCT PROFILE

Domestic warranty details (yrs)	2
Refrigerator Type	quad door
Exterior door finish	Black
Handle design	bar handle
Fridge door opening	left and right
Cooling system	frost free
Refrigerant	R600a
Dispenser type	water
Plumbed water supply required	Yes
Compressor	Inverter

DIMENSIONS

Total height (mm)	1795
Cabinet height (mm)	1776
Total width (mm)	896
Cabinet width (mm)	890
Total depth (mm)	755
Cabinet depth (mm)	643
Depth door open 90degree (mm)	1112
Air space above total height (mm)	5
Food Compartment Capacity (L) - AS/NZS 4474.1 2007 (IEC 62552-2015) *	405
Freezer Compartment Capacity (L) - AS/NZS 4474.1 2007 (IEC 62552-2015) *	157
Total Capacity (L) - AS/NZS 4474.1 2007 (IEC 62552-2015) *	562

ENERGY

Energy Star Rating - AS/NZS 4474.1 2007 (IEC 62552- 2015) *	4

REFRIGERATOR SYSTEM

Controls	electronic (with display)
Controls location	internal
Controls type	touch
Control functions	quick freeze function,quick chill,fast ice function,drinks chill,ice maker,Autosense
Door alarm	fridge and freezer

FOOD COMPARTMENT

DELI-COMPARTMENT

Deli-Compartment Runner system	rollers
Half width compartment	1

SHELVING

Shelf material	glass
Number of shelf levels	2

CRISPERS

Crisper lid/shelf	glass
Crispers Runner system	rollers
Crisper features	automatic humidity control

LIGHTING

Main light	LED

OTHER PROPERTIES

Other Properties-FOOD COMPARTMENT	Deodoriser,Water filter,Egg tray

EXTERNAL

Dispenser through door	water

BASKET/DRAWER

Full width freezer drawer	2
Basket/Drawer runner system	suspended
Full Width Pull Out Tray	3

FOOD COMPARTMENT DOOR

BINS

Deep bottle bin	2
Shallow bin	1

FREEZER COMPARTMENT

ICE FACILITY

Ice cube storage bin	1
Automatic ice maker	1
Ice Maker	Automatic

Dimensions

Model:
EQE5757BB

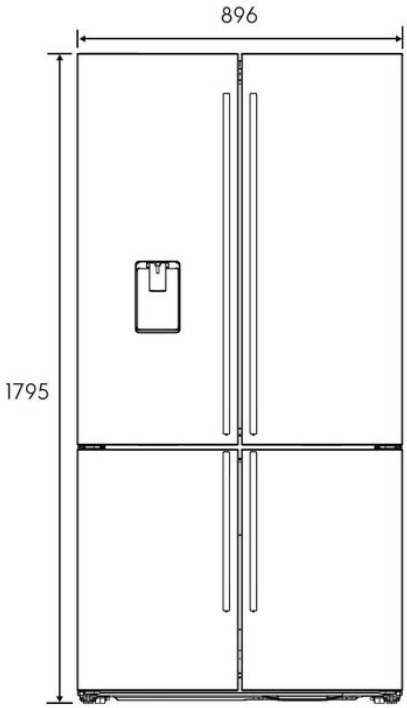

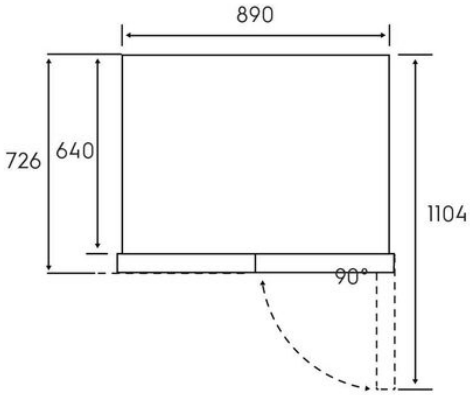

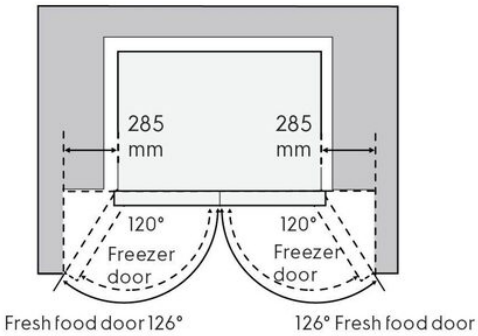

Installation options for optimal aesthetics :

Minimum side clearance kitchen cabinet

Fridge body must sit 10mm proud of kitchen cabinetry.

Minimum cabinetry opening (WxDxH) :
900mm x 649mm x 1800mm

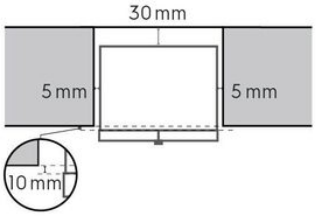

Front of fridge body in line with kitchen cabinet

Side clearance must be 25mm either side of fridge body, to have the fridge doors siting proud of the kitchen cabinetry.

Minimum cabinetry opening (WxDxH) :
940mm x 659mm x 1800mm

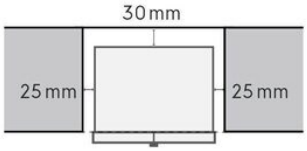

Note : Spacers supplied to assist

Fridge door flush with the cabinetry

Side clearance must be 90mm either side of the fridge body, to have the fridge doors siting flush with the kitchen cabinetry.

Minimum cabinetry opening (WxDxH) :
1070mm x 741mm x 1800m

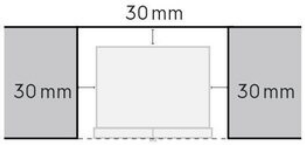

Note : Spacers supplied to assist

© 2025 Electrolux S.E.A PTE. LTD. ELX_IM_Diag_EQE5757BB_Oct25

Terms and Conditions

IMPORTANT

This is a guide of product dimensions only. For complete installation instructions, refer to the manual provided with product.

PRODUCT INFORMATION

The descriptors and illustrations in this publication apply to the specific products and models described as at the date of issue. Under our policy of continuous productdevelopment, product specifications may change without notice. Prospective purchasers should therefore check with their retailer to ensure this publication correctly describes theproducts that are being offered for sale. All information supplied is to be used for general reference purposes only and is on the understanding that Electrolux Home Products PtyLtd (Australia) and Electrolux (NZ) Ltd (New Zealand) will not be liable for any loss, liability or damage of whatever kind arising as a result of reliance on such information. Colours ofproducts illustrated are as close as printing limitations allow. Electrolux will at all times comply with its obligations pursuant to law including Trade Practices (Australian Consumer Law) Act and Regulations.

WARRANTY

This warranty only applies to Appliances purchased and used in Australia or New Zealand and used in normal domestic applications and is in addition to (and does not exclude, restrict, or modify in any way) any non-excludable statutory warranties in Australia or New Zealand. All warranties are subject to the conditions set out in the warranty card accompanying the product when purchased.

ELECTROLUX HOME PRODUCTS AUSTRALIA

telephone: 1300 363 640
fax: 1800 350 067
email: customercare@electrolux.com.au
web: www.electrolux.com.au

ELECTROLUX HOME PRODUCTS NEW ZEALAND

telephone: 09 573 2230
fax: 09 573 2221
email: customercare@electrolux.co.nz
web: www.electrolux.co.nz